Data Sheet Economical Digital Torque Gauges Series MGT

32-1046 REV 2

The MGT Torque Gauge is an economical solution for most basic torque measurement applications. A dedicated remote torque sensor with a Jacobs chuck can be used to grip a sample, bit, or fixture. The gauge's rugged reversible aluminum housing allows for hand-held use or test stand mounting. Three push buttons allow the user to easily select units of measurement, reset zero, and recall clockwise and counterclockwise peak torque values. The MGT is compatible with Mark-10 torque test stands, and is available in capacities from 10 ozFin to 100 lbFin.

Compact design	Portable and flexible in a wide range of applications
Push-button calibration	Simple and quick calibration procedure
Peak memory	For CW and CCW directions
Selectable units of measurement	Measure in lbFin/ozFin, kgFmm, or Ncm (depending on model)

Specifications

Accuracy:	±0.5% of full scale ±1 digit
Power:	AC or non-rechargeable battery, with Intelligent Power Management System (IPM). IPM warns the user via a "LO BAT" indicator and then will power off the gauge.
Battery life:	30 hours of continuous use
Selectable units of measurement:	lbFin/ozFin, kgFmm, Ncm (depending on model)
Safe overload:	150% of full scale (display shows "----" at 110% and above)
Weight:	1.8 lb [0.8 kg]
Environmental requirements:	40° F - 100°F [5°C - 45°C], <96% humidity (non-condensating)
Thermal effects:	Zero: 0.03% of full scale/°C, Span: 0.01% of full scale/°C
Housing construction:	Aluminum
Warranty:	3 years (see individual statement for further details)

Dimensions

in [mm]

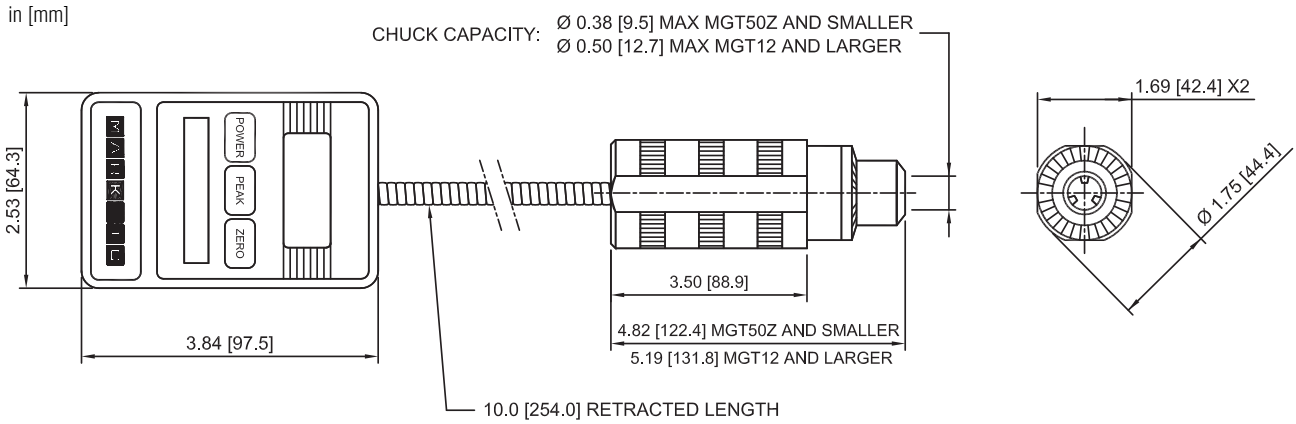

Ordering Information

Model No.	Capacity x Resolution
MGT10Z	10 x 0.01 ozFin, 7 x 0.005 kgFmm, 7 x 0.005 Ncm, 110V
MGT20Z	20 x 0.02 ozFin, 14 x 0.01 kgFmm, 14 x 0.01 Ncm, 110V
MGT50Z	50 x 0.05 ozFin, 36 x 0.05 kgFmm, 35 x 0.05 Ncm, 110V
MGT50	50 x 0.05 lbFin, 580 x 0.5 kgFmm, 570 x 0.5 Ncm, 110V
MGT100	100 x 0.1 lbFin, 1150 x 1 kgFmm, 1150 x 1 Ncm, 110V

All models include 110V AC adapters. Add suffix 'E' for euro plug (220V), 'U' for UK plug (220V), or 'A' for Australian plug (220V).

Ex: MGT-12E, MGT-50U, MGT-100A

MARK-10

Distributed by:
Nels Jorgenson & Co. ■ 20400 Nine Mile Road ■ St. Clair Shores, MI 48080
Tel: 586-774-6600 ■ Fax: 586-774-6605 ■ www.njcforce.com ■ njc@njcforce.com